ROHS

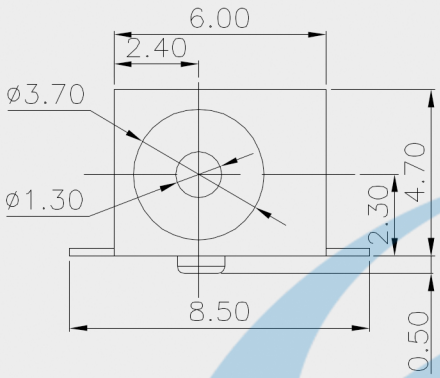

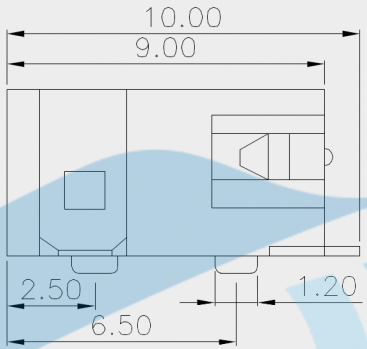

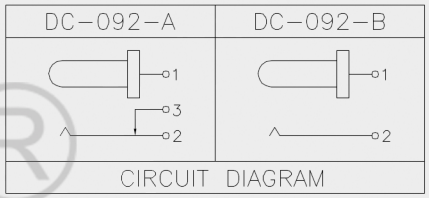

P.C.B LAYOUT(Copper-side view)

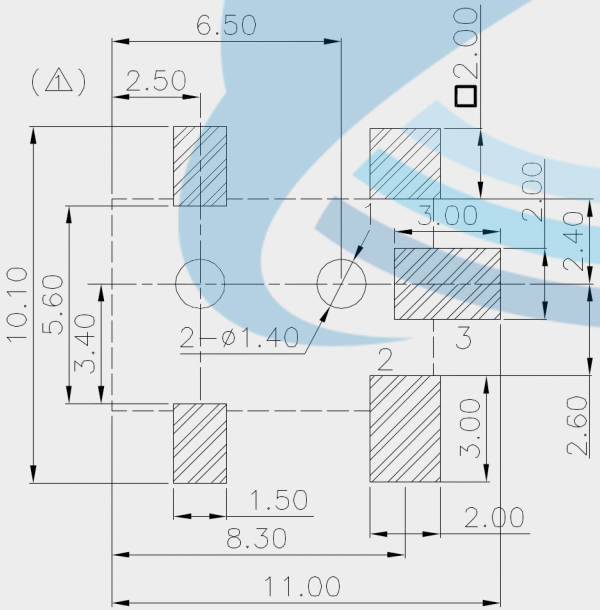

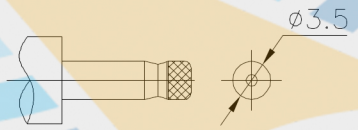

DC MATE PLUG

Rating: 0.5A 30V DC
Contact Resistance:100 mΩ Max.
Operating temperature:-20℃~70℃
Operating force:3-20N
Operating Life:5,000cycles

ITEM	PART NAME	TER'NO.	QTY.	MATERIAL	FINISHING	REMARK
②	Terminal	——	3	Phosphor bronze	Au Plating	——
①	Housing	——	1	Nylon	Black	——

APPROVALS		DATE
DRAWN	J.X.Zhang	2013/11/11
CHECKED		
APPROVALS		

东莞市颖鑫电子科技有限公司

TITLE:	DC JACKES
PART NO.	DC-092
UNIT: mm	SCALE: 1:1
DRAWING NO.	——
PROJ:	SHEET 1 OF 1

TOLERANCES ARE		ANGLE
30~以上	±0.30	±2°
10~30	±0.20	
5~10	±0.15	
~ 5	±0.10	

ECN NO.	REV.	DATE.	DESCRIPTION.	CHANGE.	CHECK.	APPRO.
——	B	——	⚠	——	——	——
——	A	——	NEW	——	——	——